TEST REPORT

Applicant	Particle Industries, Inc
Address	325 9th St, San Francisco, CA 94103 USA, 415-319-1553

Manufacturer or Supplier	Particle Industries, Inc
Address	325 9th St, San Francisco, CA 94103 USA, 415-319-1553
Product	Tracker One LTE CAT1/3G/2G
Brand Name	Particle
Model	ONE523M
Additional Models & Model Difference	ONE524M, ONE523M-NB, ONE524M-NB, see section 2.1 note
Date of tests	Aug. 18, 2020 ~ Sep. 10, 2020

The submitted sample of the above equipment has been tested according to the requirements of the following standard:

☒ **EN 303 413 V1.2.1 (2021-04)**

CONCLUSION: The submitted sample was found to <u>COMPLY</u> with the test requirement

Tested by Lucas Chen Project Engineer / EMC Department	Approved by Glyn He Assistant Manager / EMC Department
Lucas	Date: Sep. 02, 2022

TABLE OF CONTENTS

RELEASE CONTROL RECORD

ISSUE NO.	REASON FOR CHANGE	DATE ISSUED
RE2008WDG0083-2	Original release	Dec. 21, 2020
RE2208WDG0101-2	Based on the original report RE2008WDG0083-2 changed the address about the applicant and manufacturer, updated standard version, but it doesn't need to be retested.	Sep. 02, 2022

1 SUMMARY OF TEST RESULTS

The EUT has been tested according to the following specifications:

EN 303 413 V1.2.1		
Clause	**Test Parameter**	**Results**
4.2.1	Receiver blocking	Pass
4.2.2	Spurious domain	Pass

1.1 MEASUREMENT UNCERTAINTY

Where relevant, the following measurement uncertainty levels have been estimated for tests performed on the EUT:
This uncertainty represents an expanded uncertainty expressed at approximately the 95% confidence level using a coverage factor of k=2.

Parameter	Uncertainty
Uncertainty in conducted measurements	± 2.855 dB
Uncertainty in radiated measurements	± 2.855 dB
Spurious emissions	± 2.855dB

Note: Referenced documents ETSI EN 300 328 standard.

2 GENERAL INFORMATION

2.1 GENERAL DESCRIPTION OF EUT

PRODUCT	Tracker One LTE CAT1/3G/2G	
BRAND	Particle	
TEST MODEL	ONE523M	
ADDITIONAL MODELS	ONE524M, ONE523M-NB, ONE524M-NB	
NOMINAL VOLTAGE	LI+ pin：DC+3.6v--4.2V or Vusb PIN：DC+4.5V--5.5V or Vin PIN：DC 6V--30V	
REGULATORY TYPE	GPS, GALILEO	
MODULATION TECHNOLOGY	GPS	CDMA
	GALILEO	CDMA
MODULATION TYPE	GPS	BPSK
	GALILEO	CBOC
OPERATING FREQUENCY	GPS	1575.42 MHz±1.023 MHz
	GALILEO	1575.42 MHz±1.023 MHz
ANTENNA TYPE	Integral Antenna	
VERSION OF HARDWARE	V1.0	
VERSION OF SOFTWARE	V1.5.4	

Notes:

1. The above EUT information is declared by manufacturer and for more detailed features description, please refer to the manufacturer's specifications or user's manual.
2. For the test results, the EUT had been tested with all conditions, but only the worst case was shown in test report.
3. Additional models ONE524M, ONE523M-NB, ONE524M-NB are identical with the test model ONE523M except the model number for marketing purpose.
4. The EUT has two version: V1.0 and V1.1, the V1.1 version sample based on V1.0 version sample added GPIO isolation and LDO, the difference test in CE2208WDG0101 report, this report test the worst sample (V1.0 version sample).

2.2 DESCRIPTION OF TEST MODES

☒ GNSS are provided for GPS and GALILEO:

GNSS	RNSS FREQUENCY
GPS	1575.42 MHz
GALILEO	1575.42 MHz

2.2.1 TEST MODE APPLICABILITY AND TESTED DETAIL

EUT Configure Mode	Applicable to			Description
	RB	SE< 1G	SE≥ 1G	
GPS/ GALILEO	√	√	√	-

Where **RB:** Receiver blocking

SE<1G: Unwanted Emissions in the Spurious Domain below 1 GHz

SE≥1G: Unwanted Emissions in the Spurious Domain above 1 GHz

NOTE: 1. The EUT had been pre-tested on the positioned of each 3 axis. The worst case was found when positioned on **X-plane.**

RECEIVER BLOCKING:

☒ Following Supported GNSS(s) was (were) selected for the final test as listed below.

GNSS	GNSS Signals			
BDS	☐ B1I	☐ B1C		
Galileo	☒ E1	☐ E5a	☐ E5b	☐ E6
GLONASS	☐ G1	☐ G2		
GPS	☒ L1 C/A	☐ L1C	☐ L2C	☐ L5
SBAS	☐ L1	☐ L5		

☒ GNSS, GNSS signals and RNSS frequency bands

GNSS	GNSS Signal Designations	RNSS Frequency Band (MHz)
BDS	B1I	1 559 to 1 610
	B1C	1 559 to 1 610
Galileo	E1	1 559 to 1 610
	E5a	1 164 to 1 215
	E5b	1 164 to 1 215
	E6	1 215 to 1 300
GLONASS	G1	1 559 to 1 610
	G2	1 215 to 1 300
GPS	L1 C/A	1 559 to 1 610
	L1C	1 559 to 1 610
	L2C	1 215 to 1 300
	L5	1 164 to 1 215
SBAS	L1	1 559 to 1 610
	L5	1 164 to 1 215

☒ Frequency bands, blocking signal test point centre frequencies and power levels for the 1 559 MHz to 1 610 MHz RNSS band

Frequency band(MHz)	Test point centre frequency (MHz)	Adjacent frequency signal power level (dBm)	Comments
1518 - 1 525	1 524	-65	MSS (space-to-Earth) band
1 525 - 1 549	1 548	-95	MSS (space-to-Earth) band
1 549 - 1 559	1 554	-105	MSS (space-to-Earth) band
1 559 - 1 610	GUE RNSS band under test		
1 610 - 1 626	1 615	-105	MSS (Earth-to-space) band
1 626 - 1 640	1 627	-85	MSS (Earth-to-space) band

☒ Frequency bands, blocking signal test point centre frequencies and power levels for the for the 1164 MHz to 1300 MHz RNSS band

Frequency band (MHz)	Test point centre frequency (MHz)	Adjacent frequency signal power level (dBm)	Comments
960 - 1 164	1 154	-75	AM(R)S, ARNS band
1 164 - 1 215	GUE RNSS band under test		
1 215 - 1 260	GUE RNSS band under test		
1 260 - 1 300	GUE RNSS band under test		
1 300 - 1 350	1 310	-85	Radiolocation, ARNS, RNSS (Earth-to-space) band

☒ (Maximum) signal levels for each GNSS supported

GNSS	Parameters	Value
GPS	(Maximum) signal level	-128,5 dBm
Galileo	(Maximum) signal level	-127 dBm

UNWANTED EMISSIONS IN THE SPURIOUS DOMAIN TEST (BELOW 1 GHZ):

☒ Following GNSS(s) was (were) selected for the final test as listed below.

EUT CONFIGURE MODE	GNSS	GNSS SIGNAL DESIGNATIONS	RNSS FREQUENCY (MHZ)
-	GPS	L1 C/A	1575.42 MHz
-	GALILEO	E1	1575.42 MHz

UNWANTED EMISSIONS IN THE SPURIOUS DOMAIN TEST (ABOVE 1 GHZ):

☒ Following channel(s) was (were) selected for the final test as listed below.

EUT CONFIGURE MODE	GNSS	GNSS SIGNAL DESIGNATIONS	RNSS FREQUENCY (MHZ)
-	GPS	L1 C/A	1575.42 MHz
-	GALILEO	E1	1575.42 MHz

TEST CONDITION:

Applicable to	Environmental Conditions	Input Power	Tested by
RB	22 ℃, 59% RH	DC 3.7V form Battery	Daniel
SE<1G	22 ℃, 59% RH	DC 5V form Adapter	Vincent
SE≥1G	22 ℃, 59% RH	DC 5V form Adapter	Vincent

2.3 DESCRIPTION OF SUPPORT UNITS

The EUT has been tested as an independent unit together with other necessary accessories or support units. The following support units or accessories were used to form a representative test configuration during the tests.

NO.	PRODUCT	BRAND	MODEL NO.	SERIAL NO.	FCC ID
1	DC source	LONG WEI	PS-6403D	010934269	N/A
2	Adapter	N/A	DC 5V 2A	N/A	N/A
3	Adapter	PHICOMM	YH-AD-120A200-CH	N/A	N/A

NO.	SIGNAL CABLE DESCRIPTION OF THE ABOVE SUPPORT UNITS
1	AC Line: Unshielded, Detachable 1.5m, DC Line: Unshielded, Detachable 1.0m
2	USB-C Line: Unshielded detachable 2.0m.
3	DC Line: Unshielded detachable 2.0m.

2.4 TEST INSTRUMENTS

Equipment	Manufacturer	Model No.	Serial No.	Next Cal.
Signal Analyzer	Rohde&Schwarz	FSL3	101507	Apr. 04, 21
Vector Signal Generator	Rohde&Schwarz	SMBV100A	1407.6004k02-259143-XW	Apr. 04, 21
Signal Generator	Rohde&Schwarz	SMB100A	102383	Apr. 04, 21
Signal Generator	Agilent	N5181A	MY50142530	Oct. 12,20
Dual Directional Coupler	TESEQ	C5982	95208	Nov. 08,20
EMI Test Receiver	Rohde&Schwarz	ESU40	100449	Mar. 10,21
Broadcast Test System	Rohde&Schwarz	SFU	101543	Apr. 04, 21
Resistive Power Splitter	N/A	1870A	7776	Apr. 04, 21

NOTES:

1. The calibration interval of the above test instruments is 12 months and the calibrations are traceable to CEPREI/CHINA, GRGT/CHINA and NIM/CHINA.
2. The test was performed in Dongguan RF Room.

2.5 TEST PROCEDURE AND RESULTS

CONFIGURATION OF SYSTEM UNDER TEST

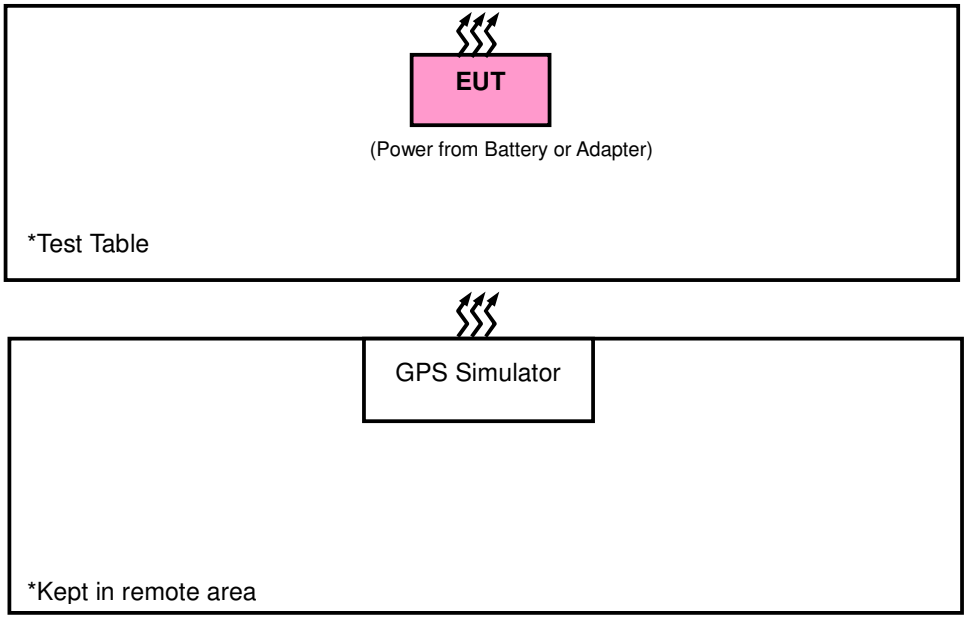

2.6 GENERAL DESCRIPTION OF APPLIED STANDARDS

The EUT is a RF Product. According to the specifications of the manufacturer, it must comply with the requirements of the following standard:

ETSI EN 303 413 V1.2.1 (2021-04)

All test items have been performed and recorded as per the above standard

3 TEST PROCEDURE AND RESULTS

3.1 RECEIVER BLOCKING

3.1.1 CONFORMANCE SPECIFICATIONS

Condition	Maximum Degradation in C/N_0
Under all test conditions	Δ $C/N_0 \leq 1$ dB

3.1.2 TEST PROCEDURES

Refer to clause 5.4 of ETSI EN 303 413 V1.2.1 (2021-04)

Measurement Method	
☒ Conducted measurement	☐ Radiated measurement

3.1.3 DEVIATION FROM TEST STANDARD

No deviation.

3.1.4 TEST SETUP

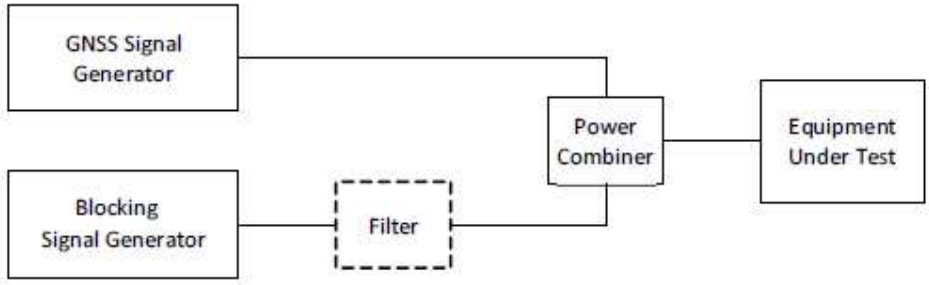

The measurements for Receiver blocking was performed at both normal environmental conditions. Controlling software has been activated to set the EUT on specific GNSS and power level.

3.1.5 TEST RESULTS

Test results for the 1 559 MHz to 1 610 MHz RNSS band

Frequency band (MHz)	Test point centre frequency (MHz)	Blocking signal power	Measured C/N_0 (dB-Hz)			
	From table 4-2	From table 4-2	No blocking signal	With blocking signal	Decrease of C/N_0	Decrease ≤ 1 dB ?
1 518 - 1 525	1524	-65				BDS ☐ Pass ☐ Fail ☐ N/A
			44.5	44.2	0.3	Galileo ☒ Pass ☐ Fail ☐ N/A
						GLONASS ☐ Pass ☐ Fail ☐ N/A
			43.9	43.6	0.3	GPS ☒ Pass ☐ Fail ☐ N/A
						SBAS ☐ Pass ☐ Fail ☐ N/A
1 525 - 1 549	1548	-95				BDS ☐ Pass ☐ Fail ☐ N/A
			44.5	44.1	0.4	Galileo ☒ Pass ☐ Fail ☐ N/A
						GLONASS ☐ Pass ☐ Fail ☐ N/A
			43.9	43.7	0.2	GPS ☒ Pass ☐ Fail ☐ N/A
						SBAS ☐ Pass ☐ Fail ☐ N/A
1 549 - 1 559	1554	-105				BDS ☐ Pass ☐ Fail ☐ N/A
			44.5	44.1	0.4	Galileo ☒ Pass ☐ Fail ☐ N/A
						GLONASS ☐ Pass ☐ Fail ☐ N/A
			43.9	43.5	0.4	GPS ☒ Pass ☐ Fail ☐ N/A
						SBAS ☐ Pass ☐ Fail ☐ N/A
1 610 - 1 626	1615	-105				BDS ☐ Pass ☐ Fail ☐ N/A
			44.58	43.9	0.6	Galileo ☒ Pass ☐ Fail ☐ N/A
						GLONASS ☐ Pass ☐ Fail ☐ N/A
			43.9	43.6	0.3	GPS ☒ Pass ☐ Fail ☐ N/A
						SBAS ☐ Pass ☐ Fail ☐ N/A
1 626 - 1 640	1627	-85				BDS ☐ Pass ☐ Fail ☐ N/A
			44.5	44.2	0.3	Galileo ☒ Pass ☐ Fail ☐ N/A
						GLONASS ☐ Pass ☐ Fail ☐ N/A
			43.9	43.7	0.2	GPS ☒ Pass ☐ Fail ☐ N/A
						SBAS ☐ Pass ☐ Fail ☐ N/A

Test results for the 1 164 MHz to 1 300 MHz RNSS band

Frequency band (MHz)	Test point centre frequency (MHz)	Blocking signal power	Measured C/N_0 (dB-Hz)			
	From table 4-3	From table 4-3	No blocking signal	With blocking signal	Decrease of C/N_0	Decrease ≤ 1 dB ?
960 - 1 164	1154	-75	--	--	--	BDS ☐ Pass ☐ Fail ☒ N/A
			--	--	--	Galileo ☐ Pass ☐ Fail ☒ N/A
			--	--	--	GLONASS ☐ Pass ☐ Fail ☒ N/A
			--	--	--	GPS ☐ Pass ☐ Fail ☒ N/A
			--	--	--	SBAS ☐ Pass ☐ Fail ☒ N/A
1 300 - 1 350	1310	-85	--	--	--	BDS ☐ Pass ☐ Fail ☒ N/A
			--	--	--	Galileo ☐ Pass ☐ Fail ☒ N/A
			--	--	--	GLONASS ☐ Pass ☐ Fail ☒ N/A
			--	--	--	GPS ☐ Pass ☐ Fail ☒ N/A
			--	--	--	SBAS ☐ Pass ☐ Fail ☒ N/A

3.2 RECEIVER SPURIOUS EMISSIONS

3.2.1 LIMIT OF RECEIVER SPURIOUS RADIATION

Frequency Range	Maximum Power Limit	Bandwidth
30 MHz ~ 1 GHz	-57dBm	100 kHz
1 GHz ~ 8.3 GHz	-47dBm	1 MHz

Note: These limits are e.r.p. for emissions up to 1 GHz and as e.i.r.p. for emissions above 1 GHz.

3.2.2 TEST PROCEDURE

Refer to clause 5.5 of ETSI EN 303 413 V1.2.1 (2021-04)

Measurement Method	
☐ Conducted measurement	☒ Radiated measurement
For Conducted measurement: The level of unwanted emissions shall be measured as their power in a specified load (conducted spurious emissions) and their effective radiated power when radiated by the cabinet or structure of the equipment with the antenna connector(s) terminated by a specified load (cabinet radiation).	
Conducted measurement (For equipment with multiple transmit chains): ☐ Option 1: The results for each of the transmit chains for the corresponding 1MHz segments shall be added and compared with the limits. ☐ Option 2: The results for each of the transmit chains shall be individually compared with the limits after these limits have been reduced by 10 x log (N) (number of active transmit chains)	

3.2.3 DEVIATION FROM TEST STANDARD

No deviation.

3.2.4 TEST SETUP

1. For the actual test configuration, please refer to the related Item in this test report (Photographs of the Test Configuration).
2. Testing was performed when the equipment was in a receive-only mode.
3. The test setup has been constructed as the normal use condition. Controlling software has been activated to set the EUT on specific status.

3.2.5 TEST RESULTS

RX Below 1GHz Worst Data:

Frequency Range	30 MHz ~ 1 GHz	Operating GNSS	GPS 1575.42MHz

SPURIOUS EMISSION LEVEL				
Frequency (MHz)	Antenna Polarization	Level (dBm)	Limit (dBm)	Margin (dB)
56.43	V	-73.08	-57.00	-16.08
106.17	V	-72.64	-57.00	-15.64
141.92	V	-73.08	-57.00	-16.08
196.33	H	-71.86	-57.00	-14.86
210.32	H	-74.43	-57.00	-17.43
342.45	V	-68.99	-57.00	-11.99
418.62	V	-78.60	-57.00	-21.60
538.32	H	-77.50	-57.00	-20.50
555.42	V	-73.81	-57.00	-16.81
625.37	H	-76.97	-57.00	-19.97
721.75	H	-73.52	-57.00	-16.52
829.01	H	-71.00	-57.00	-14.00

Frequency Range	30 MHz ~ 1 GHz	Operating GNSS	GALILEO 1575.42MHz

SPURIOUS EMISSION LEVEL				
Frequency (MHz)	Antenna Polarization	Level (dBm)	Limit (dBm)	Margin (dB)
45.54	H	-76.05	-57.00	-19.05
115.50	V	-73.29	-57.00	-16.29
143.48	V	-72.98	-57.00	-15.98
194.78	H	-70.17	-57.00	-13.17
230.00	H	-77.46	-57.00	-20.46
342.45	V	-68.77	-57.00	-11.77
382.87	H	-81.82	-57.00	-24.82
470.00	V	-78.69	-57.00	-21.69
487.02	H	-77.49	-57.00	-20.49
581.84	V	-73.35	-57.00	-16.35
654.90	V	-73.38	-57.00	-16.38
690.66	H	-75.03	-57.00	-18.03

RX Above 1GHz Data

Frequency Range	1 GHz ~ 8.3 GHz	Operating GNSS	GPS 1575.42MHz

SPURIOUS EMISSION LEVEL				
Frequency (MHz)	Antenna Polarization	Level (dBm)	Limit (dBm)	Margin (dB)
3150.84	H	-52.14	-47.00	-5.14
3150.84	V	-53.24	-47.00	-6.24
4726.26	H	-51.34	-47.00	-4.34
4726.26	V	-52.54	-47.00	-5.54

Frequency Range	1 GHz ~ 8.3 GHz	Operating GNSS	GALILEO 1575.42MHz

SPURIOUS EMISSION LEVEL				
Frequency (MHz)	Antenna Polarization	Level (dBm)	Limit (dBm)	Margin (dB)
3150.84	H	-52.44	-47.00	-5.44
3150.84	V	-53.58	-47.00	-6.58
4726.26	H	-51.02	-47.00	-4.02
4726.26	V	-51.34	-47.00	-4.34

4 PHOTOGRAPHS OF THE TEST CONFIGURATION

RECEIVER BLOCKING

RADIATED EMISSION (BELOW 1GHz)

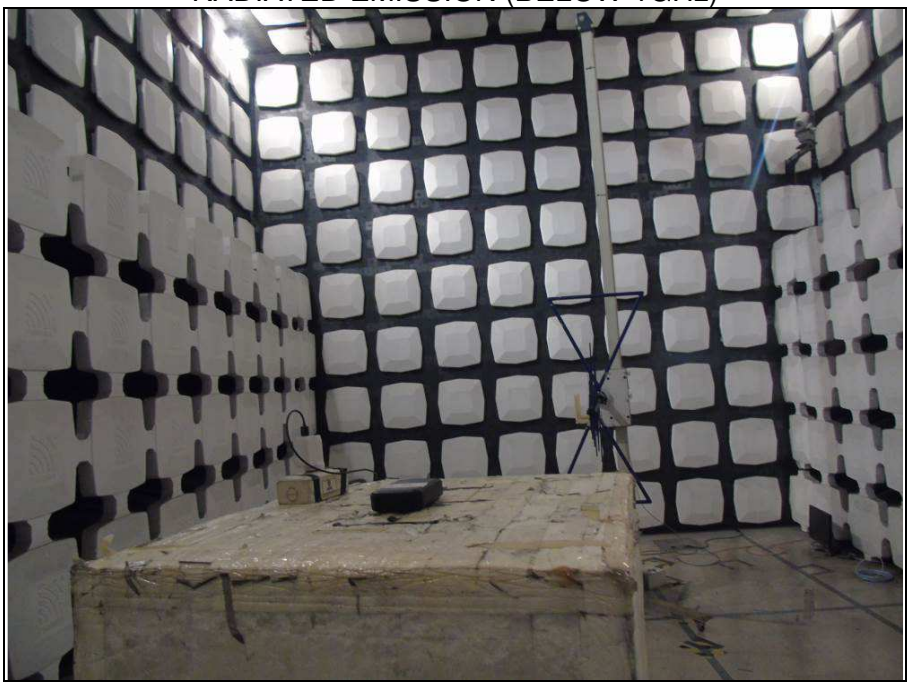

RADIATED EMISSION (ABOVE 1GHz)

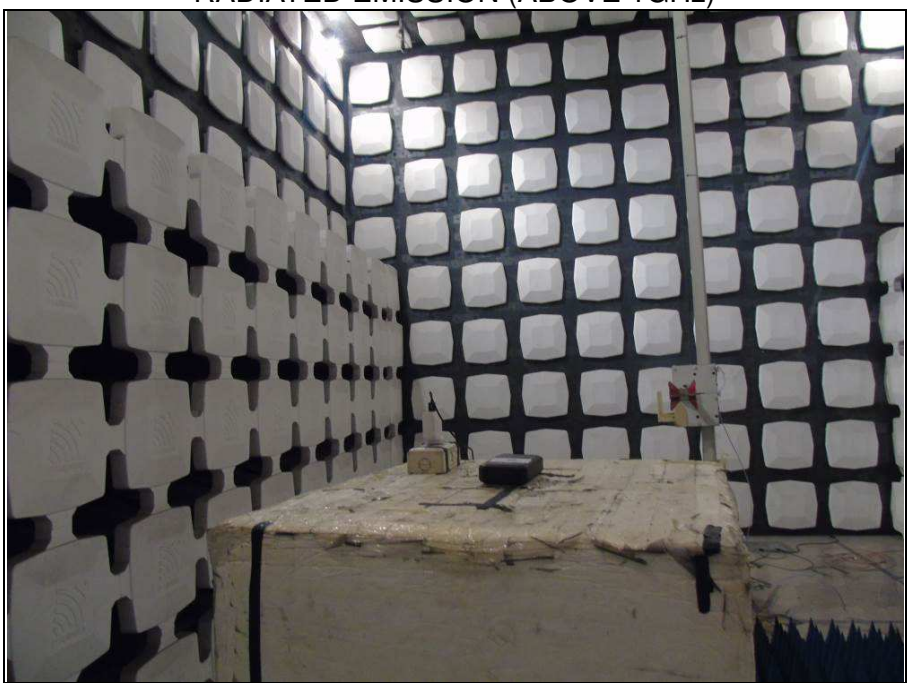

5 APPENDIX A – MODIFICATIONS RECORDERS FOR ENGINEERING CHANGES TO THE EUT BY THE LAB

No any modifications were made to the EUT by the lab during the test.

--- END ---